DS-2CD2745FWD-IZS

4 MP Outdoor IR Varifocal Network Dome Camera

Powered by DarkFighter



- **1/2.5" (4 MP) Progressive Scan CMOS**
- **Up to 2688 x 1520 Resolution @ 30 fps**
- **Minimum Illumination:**
  Color: 0.011 lux @ (f/1.4, AGC on)
  0 lux with IR
- **Up to 100 ft (30 m) EXIR 2.0 Range**
- **DarkFighter Technology**
- **2.8 mm to 12 mm Motorized Varifocal Lens**
- **H.265+, H.265, H.264+, H.264**
- **120 dB True WDR**
- **MicroSD Card Slot Supports 128 GB**
- **IP67, IK10 Protection**
- **12 VDC and PoE (802.3af)**

The Hikvision DS-2CD2745FWD-IZS Outdoor IR Varifocal Network Dome Camera provides high definition output. It supports H.265+ video compression, which assures savings in bandwidth and storage.

The camera is equipped with a 2.8 mm to 12 mm varifocal lens and offers an EXIR 2.0 range of up to 100 ft (30 m).

Smart features such as line crossing, intrusion, unattended luggage, and scene change detection are also supported.

Available models:
DS-2CD2745FWD-IZS

Specifications

	DS-2CD2745FWD-IZS
Camera	
Image Sensor	1/2.5" progressive scan CMOS
Minimum Illumination	Color: 0.011 lux @ (ƒ/1.4, AGC on), 0 lux with IR
Shutter Speed	1/3 s to 1/100,000 s
Slow Shutter	Yes
Auto-Iris	No
Day/Night	IR cut filter
Digital Noise Reduction	3D DNR
WDR	120 dB
Three-Axis Adjustment	Pan: 0° to 355°, tilt: 0° to 75°, rotate: 0° to 355°
Lens	
Focal Length	2.8 mm to 12 mm motorized varifocal lens
Aperture	ƒ/1.4
FOV	2.8 mm to 12 mm, horizontal FOV: 114° to 32°, vertical FOV: 59° to 18°, diagonal FOV: 141° to 36.5°
Lens Mount	Ø14
IR	
IR Range	Up to 100 ft (30 m)
Wavelength	850 nm
Compression Standard	
Video Compression	Main stream: H.265+/H.265/H.264+/H.264; sub stream: H.265+/H.265/H.264+/H.264/MJPEG; third stream: H.265+/H.265/H.264+/H.264
H.264 Type	Main profile/high profile
H.264+	Yes
H.265 Type	Main profile
H.265+	Yes
Video Bit Rate	32 Kbps to 16 Mbps
Audio Compression	G.711/G.722.1/G.726/MP2L2/PCM
Audio Bit Rate	64 Kbps (G.711)/16 Kbps (G.722.1)/16 Kbps (G.726)/32 to 192 Kbps (MP2L2)
Smart Features	
Behavior Analysis	Line crossing detection, intrusion detection, object removal detection, unattended baggage detection
Exception Detection	Scene change detection
Face Detection	Yes
Region of Interest	Supports one fixed region for main stream and sub-stream
Image	
Maximum Resolution	2688 × 1520
Main Stream	30 fps (2688 × 1520, 2304 × 1296, 1920 × 1080)
Sub Stream	30 fps (640 × 480, 640 × 360, 320 × 240)
Third Stream	30 fps (1280 × 720, 640 × 360, 352 × 240)
Image Enhancement	BLC/3D DNR
Image Setting	Rotate mode, saturation, brightness, contrast, sharpness adjustable by client software or Web browser
Target Cropping	No
SVC	H.264 and H.265 encoding support
Day/Night Switch	Day/night/auto/schedule/triggered by alarm in
Network	
Network Storage	Supports microSD/SDHC/SDXC card (128 GB), local storage and NAS (NFS, SMB/CIFS), ANR
Alarm Trigger	Motion detection, video tampering, network disconnected, IP address conflict, illegal login, HDD full, HDD error
Protocols	TCP/IP, ICMP, HTTP, HTTPS, FTP, DHCP, DNS, DDNS, RTP, RTSP, RTCP, PPPoE, NTP, UPnP, SMTP, SNMP, IGMP, 802.1x, QoS, IPv6, Bonjour
General Function	One-key reset, anti-flicker, three streams, heartbeat, password protection, privacy mask, watermark, IP address filter
API	ONVIF (PROFILE S, PROFILE G), ISAPI
Simultaneous Live View	Up to 6 channels
User/Host	Up to 32 users; 3 levels: administrator, operator, and user
Client	iVMS-4200, iVMS-4500, Hik-Connect
Web Browser	IE 8+, Chrome 31.0–44, Firefox 30.0–51, Safari 8.0+
Interface	
Audio	One input (line in, 3.5 mm), one output (line out, 3.5 mm), mono sound
Alarm	One input, one output
Video Output	One Vp-p Composite Output (75 Ω) (for adjustment only)
Communication Interface	One-port RJ-45 10M/100M self-adaptive Ethernet port
On-Board Storage	Built-in microSD/SDHC/SDXC slot, up to 128 GB
Reset Button	Yes
Audio	
Environment Noise Filtering	Yes
Audio Sampling Rate	8 kHz/16 kHz/32 kHz/44.1 kHZ/48 kHz
General	
Operating Conditions	-22° to 140° F (-30° to 60° C), humidity 95% or less (non-condensing)
Power Supply	12 VDC ±25%, terminal block for DC input, PoE (802.3af, class 3)
Power Consumption and Current	12 VDC, 0.9 A, maximum 10.5 W, PoE (802.3af, 36 V to 57 V), 0.4 A to 0.2 A, maximum 12.5 W
Protection Level	IP67, IK10
Material	Metal and plastic
Dimensions	Ø6" × 5.2" (Ø153.4 mm × 133.1 mm)
Weight	2.8 lbs (1.29 kg)

© 2020 Hikvision USA Inc. • All Rights Reserved • Specifications subject to change without notice.
Hikvision USA Inc., 18639 Railroad Street, City of Industry, CA 91748, USA • Hikvision Canada, 4848 rue Levy, St-Laurent, Quebec, Canada, H4R 2P1
Tel: +1-909-895-0400 • Toll Free in USA: +1-866-200-6690 • E-Mail: sales.usa@hikvision.com • www.hikvision.com
Rev. 060420NA

Dimensions

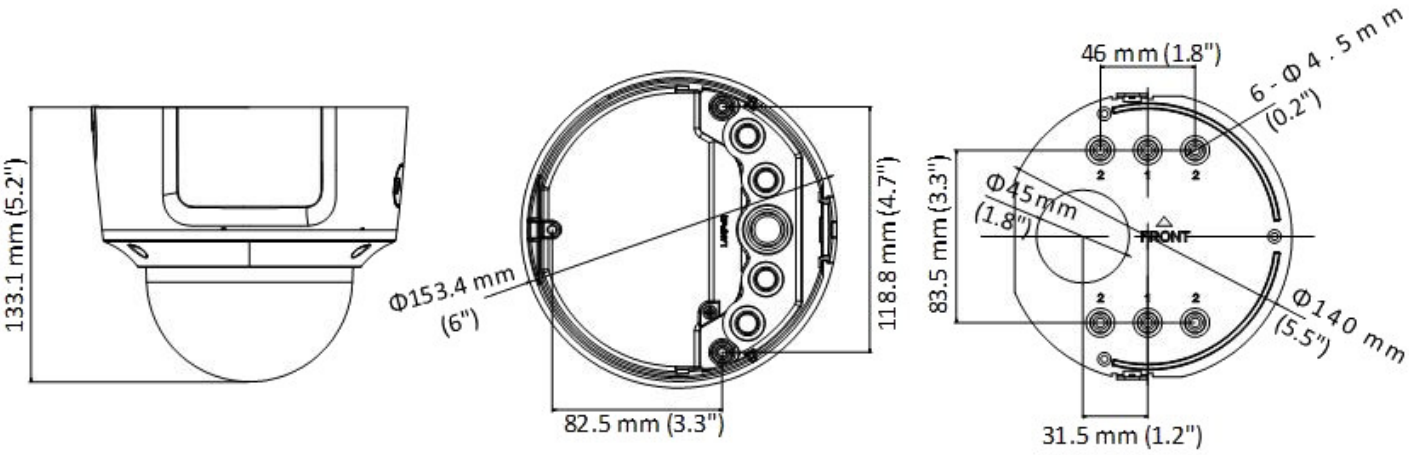

Accessories

NOT INCLUDED					
					
WML Wall Mount Long	**CPM** Ceiling Pendant Mount	**PC155** 155 mm Pendant Cap	**CM1** Corner Mount	**PM1** Pole Mount	**RCM-5** In-Ceiling Mount

© 2020 Hikvision USA Inc. • All Rights Reserved • Specifications subject to change without notice.
Hikvision USA Inc., 18639 Railroad Street, City of Industry, CA 91748, USA • Hikvision Canada, 4848 rue Levy, St-Laurent, Quebec, Canada, H4R 2P1
Tel: +1-909-895-0400 • Toll Free in USA: +1-866-200-6690 • E-Mail: sales.usa@hikvision.com • www.hikvision.com